THIS DRAWING IS THE SOLE PROPERTY OF SUPERCHILL AUSTRALIA.
AND IS RETURNABLE ON REQUEST. IT IS TO BE TREATED AS CONFIDENTIAL,
AND NOT TO BE COPIED OR COMMUNICATED TO ANY OTHER PERSON WITHOUT
THE WRITTEN CONSENT OF SUPERCHILL. IT MAY ONLY
BE USED FOR MANUFACTURE WHEN ACCOMPANIED BY A WRITTEN ORDER.

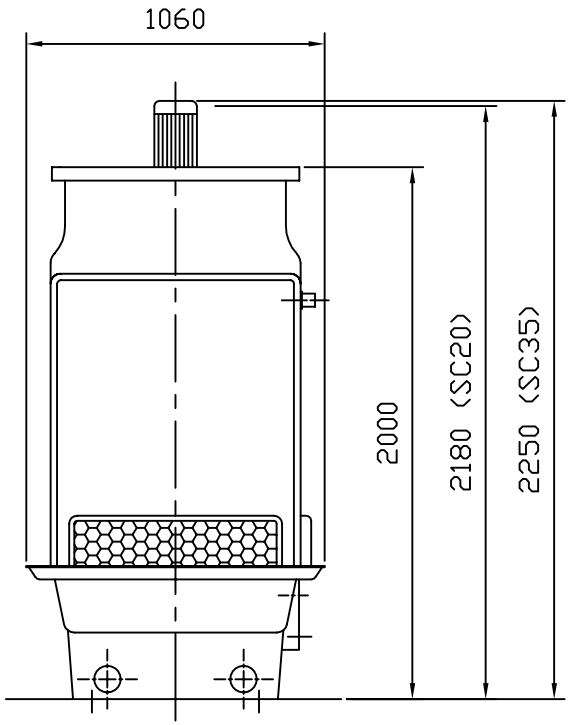


SIDE ELEVATION

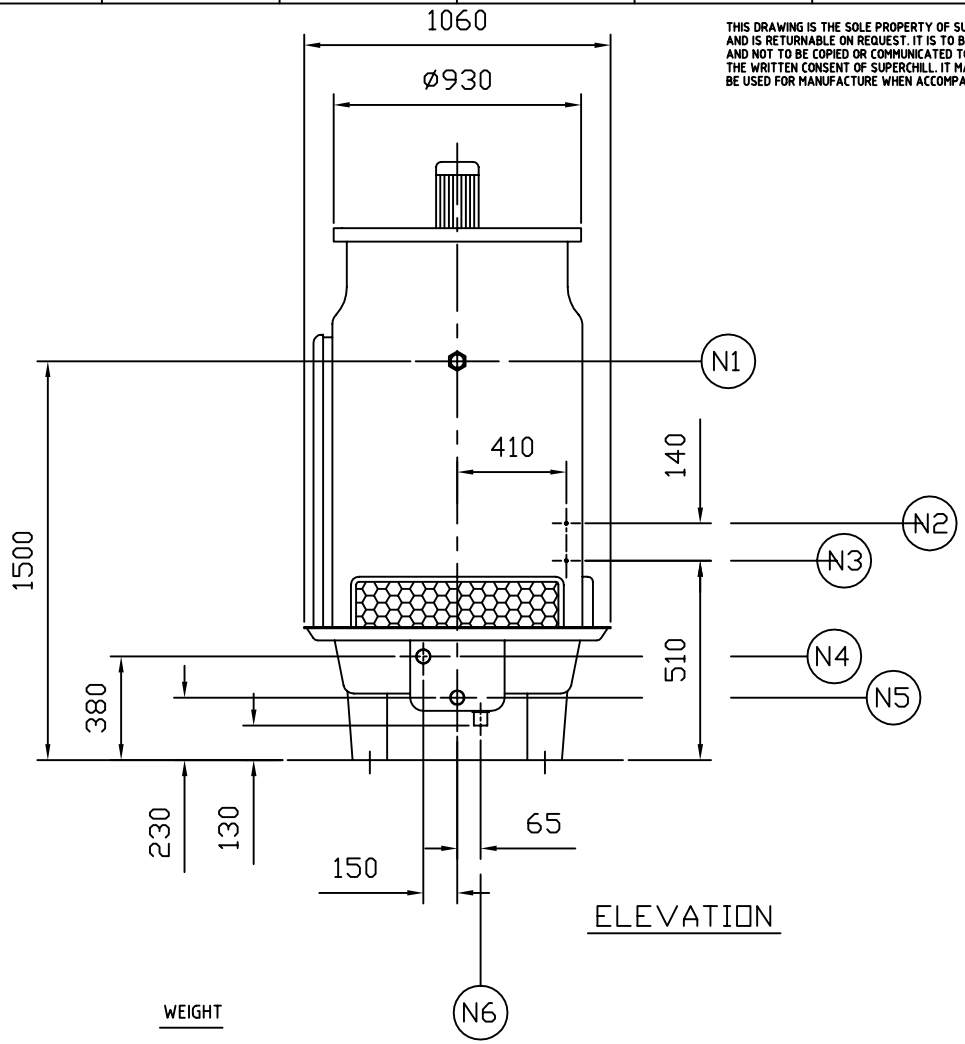


ELEVATION

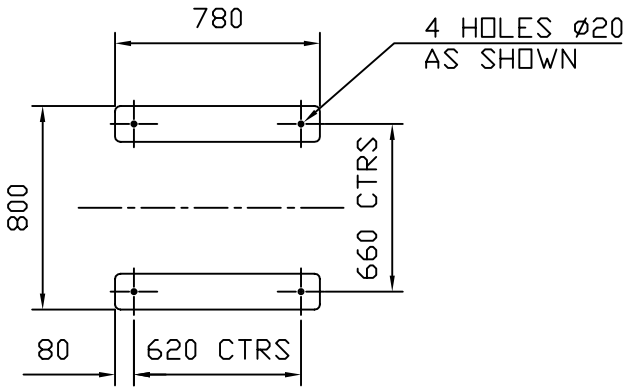


FOUNDATION DETAILS

0
50
100

WEIGHT

DRY 150Kg
OPERATING 300Kg

MOTOR

SC20-0.55 kW / SC35 - 0.75 kW
415-3-50 6 POLE FOOT MOUNTED TEFC

IMPELLER

820/6-9/25°/PPG/4Z and
820/9-9/22.5°/PPG/4Z

TERMINATION POINTS

N1-HOT WATER INLET NB50 BSP (F)-PVC
N2-QUICK FILL NB15 BSP (M)-BRASS
N3-MAKE UP WATER NB15 BSP (M)-BRASS
N4-OVERFLOW NB32 BSP (F)-PVC
N5-COLD WATER OUTLET NB50 BSP (F)-PVC
N6-DRAIN NB50 SINK PLUG PVC

| REFERENCE DRGS. | REF. DRG. NO. | REFERENCE DRAWING TITLE |
|---|---|---|
| | | |

| REVISIONS | NO. | DESCRIPTION | REV. BY | DATE | APPR. BY |
|---|---|---|---|---|---|
| | | | | | |

GENERAL NOTES

1. ALL WELDS TO BE 0.7X MIN PLATE THICKNESS CONTINUOUS FILLET U.O.N
2. ALL WELDS TO BE IN ACCORDANCE WITH AS 1554 PART 1 PRE QUALIFIED FILLET WELDS
3. ALL STEEL SECTIONS TO BE IN ACCORDANCE WITH AS3679-250 AND CURRENT BHP STRUCTURAL SHAPES
4. ALL BOLTS AND NUTS TO BE IN ACCORDANCE WITH AS1111,AS1112, AS1110,AS1252 UNLESS OTHERWISE NOTED.
5. DO NOT SCALE

TOLERANCES: (UNLESS OTHERWISE SPECIFIED)

| | |
|---|---|
| NON MACHINED SURFACES | ±2 |
| MACHINED SURFACES | |
| ONE DECIMAL PLACE | ±0.3 |
| NO DECIMAL PLACE | ±1 |
| ANGLES & SQUARENESS | ±0.5° |

SURFACE FINISH

| AS 1100 | MAX. C.L.A | EQUIV |
|---|---|---|
| | NO. M/C | |
| | 25um | |
| | 1.6um | |
| | 6.3um | |
| | 1.6um | |

THIRD ANG. PROJ.
AUST STD AS1100

AUTOCAD R13

SUPERCHILL
SUPERCHILL AUSTRALIA
258 Princes Hwy,
DANDENONG Vic. 3175

A1

DESIGNED: S/C
DRAWN: BS
DATE: 26/4/2000
CHECKED:
APPROVED:
SCALE: 1:20

TITLE: SC35/SC20
COOLING TOWER
GENERAL ARRANGEMENT

CLIENT:

DRG. NO. SC035 | SHT. NO. 1/1 | REV 2