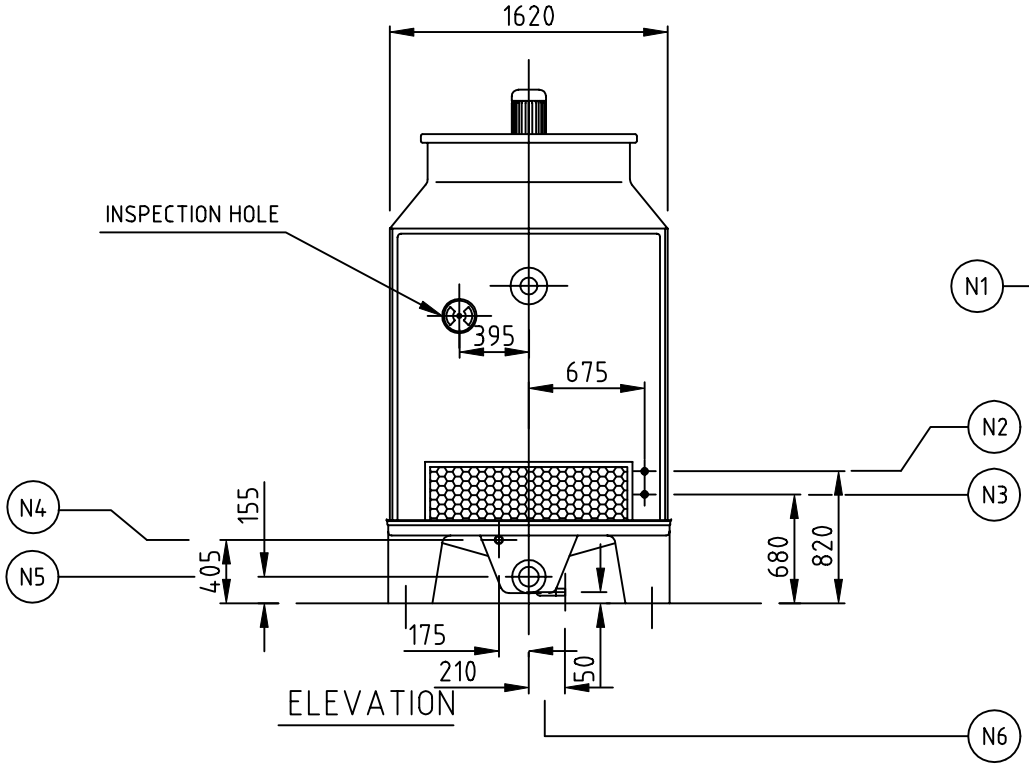

ELEVATION

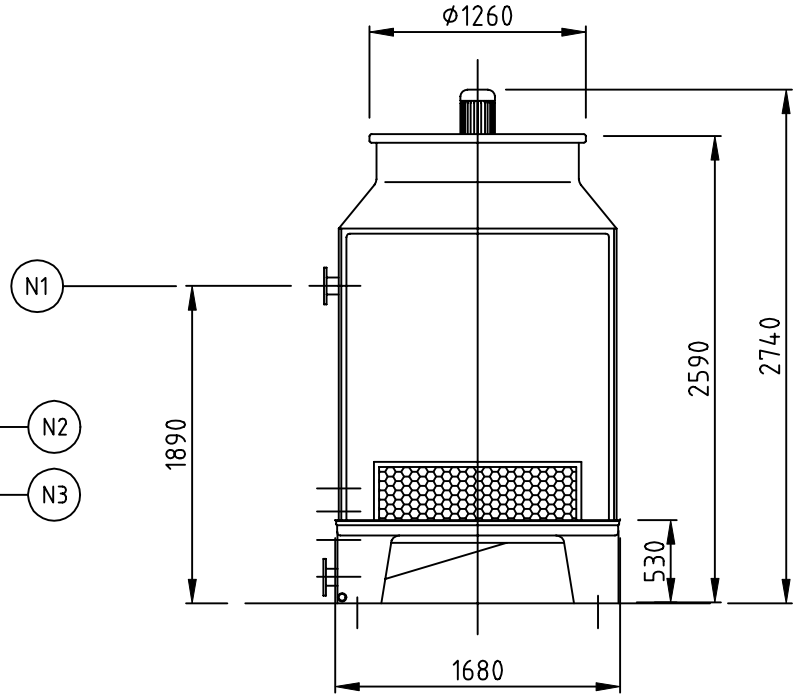

SIDE ELEVATION

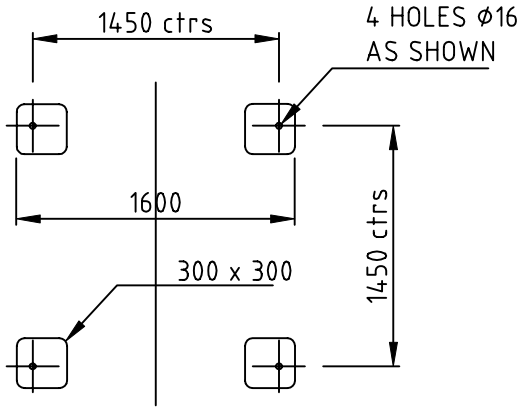

FOUNDATION DETAILS

TERMINATION POINTS

N1-HOT WATER INLET NB100 TABLE E PVC FLANGE
N2-QUICK FILL 20 BSP (M)-BRASS
N3-MAKE UP WATER 20 BSP (M)-BRASS
N4-OVERFLOW 32 BSP (F)-PVC
N5-COLD WATER OUTLET NB100 TABLE E PVC FLANGE
N6-DRAIN NB50 BSP (F)-PVC

WEIGHT

DRY 400Kg
OPERATING 770Kg

MOTOR

2.2 kW 6 POLE FOOT MOUNTED TEFC
415-3-50

REV	DESCRIPTION	DRAWN	CHECKED	APPRVD	ISSUE DATE
6	-				
5	-				
4	-				
3	-				
2	-				
1	-				
0	UPDATED DRAWING	K.W.	B.S.	B.S.	01/04/03

THIRD ANGLE PROJECTION

- Tolerance on all dimensions ±10 unless specified.
- All dimensions in millimeters unless specified.

DRAWING NUMBER: SC 95

Title: SC 95 GENERAL ARRANGEMENT

Filename: SC 95.DWG

Scale: N.T.S. | Drawn By: K.Walker | Date: 01/04/2003 | Page 1 of 1 | Revision: 0

CLIENT:
LOCATION:
CONTRACT No.
JOB No.
APPROVED BY: B.S.

SUPERCHILL AUSTRALIA PTY LTD
256 Princes HWY, Dandenong 3175
Ph. +613 9793 6166
ABN: 95 961 691 625
www.superchill.com

This drawing is the property of SUPERCHILL AUSTRALIA PTY.LTD. and being Private and Confidential is supplied on the express condition that it is not to be used for any purpose or copied or communicated to any other person without our written consent.

A4