THIS DRAWING IS THE SOLE PROPERTY OF SUPERCHILL AUSTRALIA.
AND IS RETURNABLE ON REQUEST. IT IS TO BE TREATED AS CONFIDENTIAL,
AND NOT TO BE COPIED OR COMMUNICATED TO ANY OTHER PERSON WITHOUT
THE WRITTEN CONSENT OF SUPERCHILL. IT MAY ONLY
BE USED FOR MANUFACTURE WHEN ACCOMPANIED BY A WRITTEN ORDER.

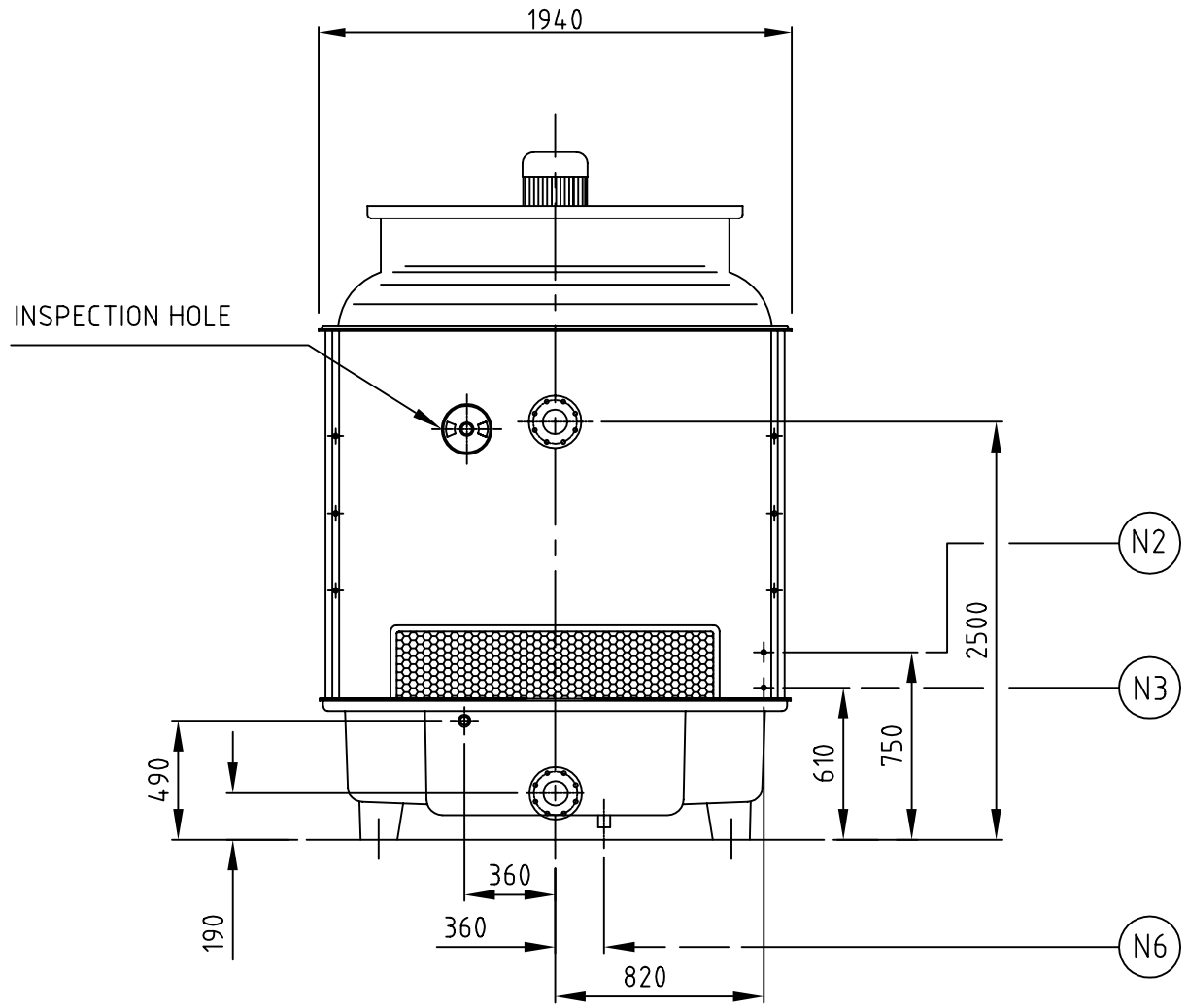

ELEVATION

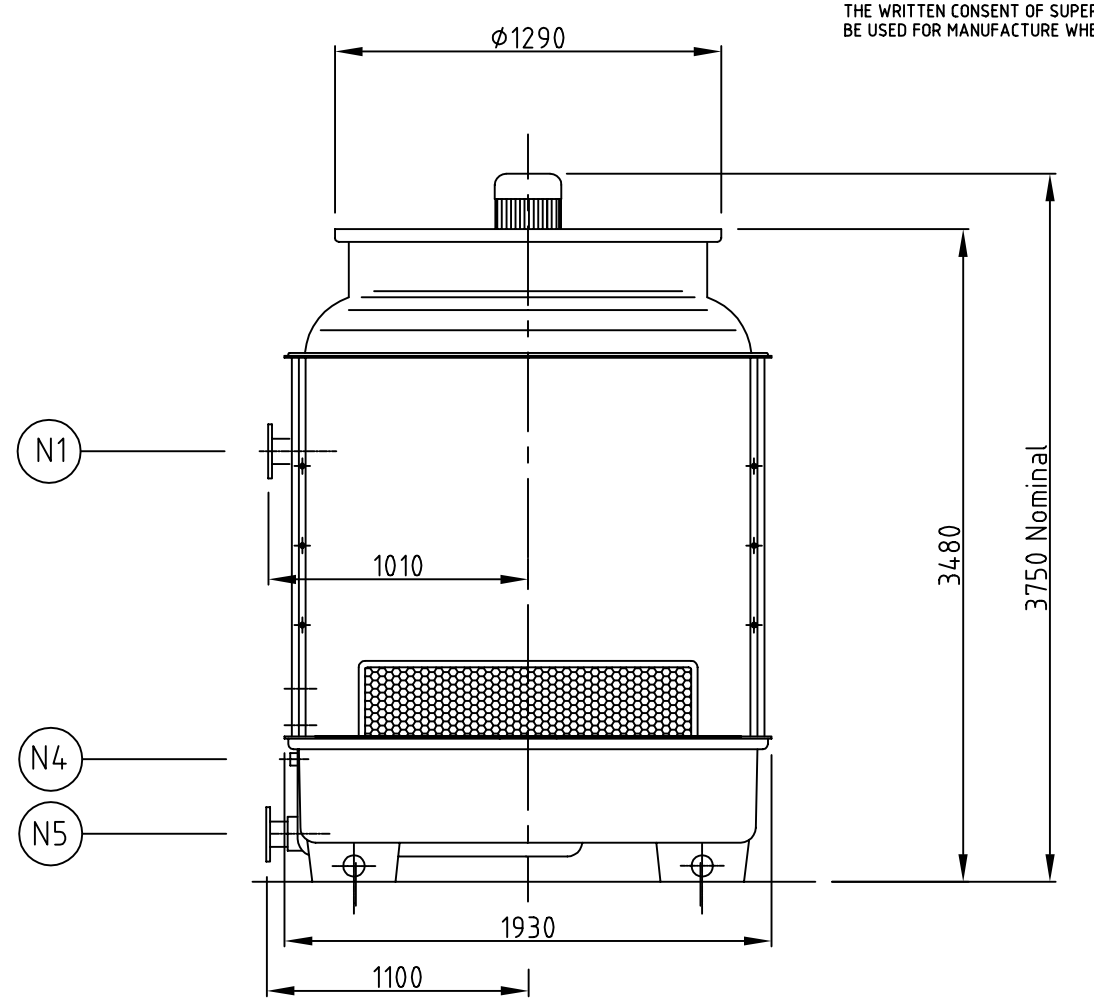

SIDE ELEVATION

WEIGHT

DRY 720 KG

WET 1555 KG

MOTOR

4.0 kW 6 POLE FOOT MTD or
5.5 kW 6 POLE FOOT MTD
TEFC 415-3-50

IMPELLER

AXIAL 1150/4-4/30/PPG/6WR or
AXIAL 1150/5-5/32.5/PPG/6WR

TERMINATION POINTS

N1-HOT WATER INLET NB100 (FLANGE)- PVC

N2-QUICK FILL NB20 BSP (M)-BRASS

N3-MAKE UP WATER NB20 (M)-BRASS

N4-OVERFLOW NB32 (F)-PVC

N5-COLD WATER OUTLET NB150 (FLANGE)-PVC

N6-DRAIN NB50 (M) PVC

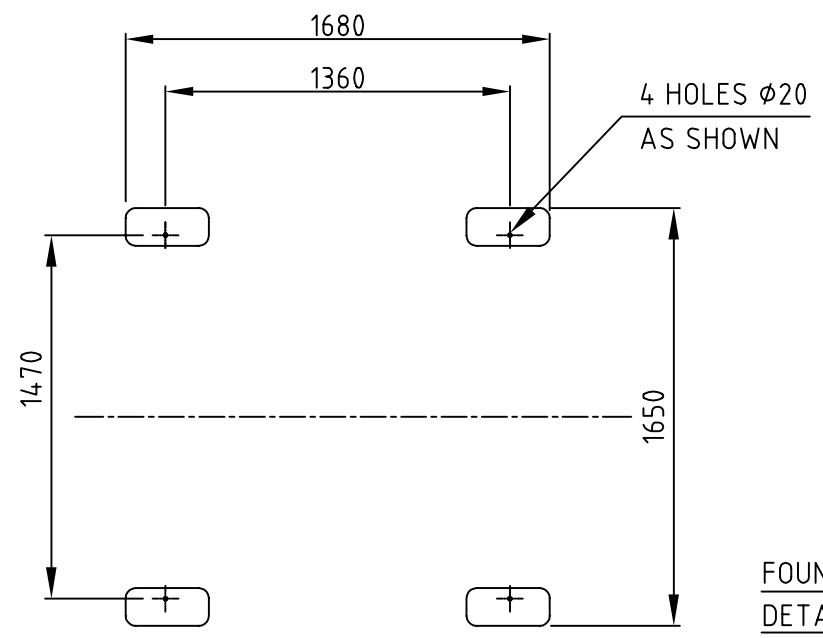

FOUNDATION DETAILS

REF. DRG. NO.	REFERENCE DRAWING TITLE

REFERENCE DRGS.

NO.	DESCRIPTION	REV. BY	DATE	APPR. BY

REVISIONS

GENERAL NOTES

1. ALL WELDS TO BE 0.7X MIN PLATE THICKNESS CONTINUOUS FILLET U.O.N
2. ALL WELDS TO BE IN ACCORDANCE WITH AS 1554 PART 1 PRE QUALIFIED FILLET WELDS
3. ALL STEEL SECTIONS TO BE IN ACCORDANCE WITH AS3679-250 AND CURRENT BHP STRUCTURAL SHAPES
4. ALL BOLTS AND NUTS TO BE IN ACCORDANCE WITH AS1111,AS1112, AS1110,AS1252 UNLESS OTHERWISE NOTED.
5. DO NOT SCALE

TOLERANCES: (UNLESS OTHERWISE SPECIFIED)
NON MACHINED SURFACES ±2
MACHINED SURFACES
ONE DECIMAL PLACE ±0.3
NO DECIMAL PLACE ±1
ANGLES & SQUARENESS ±0.5°

SURFACE FINISH

AS 1100	MAX. CLA	EQUIV
	NO. M/C	
	25um	
	1.6um	
	6.3um	
	1.6um	

THIRD ANG. PROJ.
AUST STD AS1100

AUTOCAD R13

J&D GROUP
88 LEILA ROAD,
BALCATTA, WA 6021
PH/FAX: (08) 9345 1288
MOBILE: 0409 988 997

SUPERCHILL
SUPERCHILL AUSTRALIA
256 Princess Hwy,
DANDENONG Vic. 3175

A1

DESIGNED:
DRAWN: BS
DATE: 14/1/2000
CHECKED:
APPROVED:
SCALE: 1:25

TITLE: SC150
COOLING TOWER
GENERAL ARRANGEMENT

CLIENT

DRG. NO. 018 | SHT. NO. 1/1 | REV 2